ProductionV2SiemensTIA

Table of contents

Pick and Place XYZ Alg(small pallet) [FB2]	3 - 1

Pick and Place XYZ Alg(small pallet) [FB2]

Pick and Place XYZ Alg(small pallet) Properties							
General							
Name	Pick and Place XYZ Alg(small pallet)	**Number**	2	**Type**	FB	**Language**	LAD
Numbering	Automatic						
Information							
Title		**Author**		**Comment**		**Family**	
Version	0.1	**User-defined ID**					

Name	Data type	Default value	Retain	Accessible from HMI/OPC UA/Web API	Writable from HMI/OPC UA/Web API	Visible in HMI engineering	Setpoint	Supervision	Comment
Input									
Pallet	Bool	false	Non-retain	True	True	True	False		
Box at place	Bool	false	Non-retain	True	True	True	False		
X	Real	0.0	Non-retain	True	True	True	False		
Y	Real	0.0	Non-retain	True	True	True	False		
Z	Real	0.0	Non-retain	True	True	True	False		
RESET	Bool	false	Non-retain	True	True	True	False		
Detected	Bool	false	Non-retain	True	True	True	False		
Output									
SP X	Real	0.0	Non-retain	True	True	True	False		
SP Y	Real	0.0	Non-retain	True	True	True	False		
SP Z	Real	0.0	Non-retain	True	True	True	False		
C+	Bool	false	Non-retain	True	True	True	False		
Grab	Bool	false	Non-retain	True	True	True	False		
Box Light R	Bool	false	Non-retain	True	True	True	False		
Box Light Y	Bool	false	Non-retain	True	True	True	False		
Box Light G	Bool	false	Non-retain	True	True	True	False		
pnp belt	Bool	false	Non-retain	True	True	True	False		
Sequence Done	Bool	false	Non-retain	True	True	True	False		
InOut									
Static									
C Limit	DInt	0	Non-retain	True	True	True	False		
FAULT	Bool	false	Non-retain	True	True	True	False		
Step	DInt	0	Non-retain	True	True	True	False		
Sequence Active	Bool	false	Non-retain	True	True	True	False		
ptrig[00]	Bool	false	Non-retain	True	True	True	False		
ptrig[0]	Bool	false	Non-retain	True	True	True	False		
ptrig[1]	Bool	false	Non-retain	True	True	True	False		
ptrig[1.1]	Bool	false	Non-retain	True	True	True	False		
ptrig[1.2]	Bool	false	Non-retain	True	True	True	False		
ptrig[2]	Bool	false	Non-retain	True	True	True	False		
ptrig[3]	Bool	false	Non-retain	True	True	True	False		
ptrig[4]	Bool	false	Non-retain	True	True	True	False		
ptrig[5]	Bool	false	Non-retain	True	True	True	False		
ptrig[6]	Bool	false	Non-retain	True	True	True	False		
ptrig[7]	Bool	false	Non-retain	True	True	True	False		
ptrig[8]	Bool	false	Non-retain	True	True	True	False		
ptrig[9]	Bool	false	Non-retain	True	True	True	False		
ptrig[10]	Bool	false	Non-retain	True	True	True	False		
ptrig[11]	Bool	false	Non-retain	True	True	True	False		
ptrig[12]	Bool	false	Non-retain	True	True	True	False		
ptrig[13]	Bool	false	Non-retain	True	True	True	False		
ptrig[14]	Bool	false	Non-retain	True	True	True	False		
ptrig[15]	Bool	false	Non-retain	True	True	True	False		
ptrig[16]	Bool	false	Non-retain	True	True	True	False		
ptrig[17]	Bool	false	Non-retain	True	True	True	False		
ptrig[18]	Bool	false	Non-retain	True	True	True	False		
ptrig[19]	Bool	false	Non-retain	True	True	True	False		
ptrig[20]	Bool	false	Non-retain	True	True	True	False		
ptrig[21]	Bool	false	Non-retain	True	True	True	False		
ptrig[22]	Bool	false	Non-retain	True	True	True	False		
ptrig[23]	Bool	false	Non-retain	True	True	True	False		
ptrig[24]	Bool	false	Non-retain	True	True	True	False		
ptrig[25]	Bool	false	Non-retain	True	True	True	False		
ptrig[26]	Bool	false	Non-retain	True	True	True	False		
ptrig[27]	Bool	false	Non-retain	True	True	True	False		
ptrig[28]	Bool	false	Non-retain	True	True	True	False		
ptrig[29]	Bool	false	Non-retain	True	True	True	False		
ptrig[30]	Bool	false	Non-retain	True	True	True	False		
ptrig[31]	Bool	false	Non-retain	True	True	True	False		

Name	Data type	Default value	Retain	Accessible from HMI/OPC UA/Web API	Writable from HMI/OPC UA/Web API	Visible in HMI engineering	Setpoint	Supervision	Comment
ptrig[32]	Bool	false	Non-retain	True	True	True	False		
ptrig[33]	Bool	false	Non-retain	True	True	True	False		
ptrig[34]	Bool	false	Non-retain	True	True	True	False		
ptrig[35]	Bool	false	Non-retain	True	True	True	False		
ptrig[36]	Bool	false	Non-retain	True	True	True	False		
Pnp Grab Delay	TON_TIME		Non-retain	True	True	True	False		
PT	Time	T#1s	Non-retain	True	True	True	False		
ET	Time	T#0ms	Non-retain	True	False	True	False		
IN	Bool	false	Non-retain	True	True	True	False		
Q	Bool	false	Non-retain	True	False	True	False		
Pnp Grab Delay2	TON_TIME		Non-retain	True	True	True	False		
PT	Time	T#1s	Non-retain	True	True	True	False		
ET	Time	T#0ms	Non-retain	True	False	True	False		
IN	Bool	false	Non-retain	True	True	True	False		
Q	Bool	false	Non-retain	True	False	True	False		
Pnp Grab Delay3	TON_TIME		Non-retain	True	True	True	False		
PT	Time	T#1s	Non-retain	True	True	True	False		
ET	Time	T#0ms	Non-retain	True	False	True	False		
IN	Bool	false	Non-retain	True	True	True	False		
Q	Bool	false	Non-retain	True	False	True	False		
Pnp Grab Delay4	TON_TIME		Non-retain	True	True	True	False		
PT	Time	T#1s	Non-retain	True	True	True	False		
ET	Time	T#0ms	Non-retain	True	False	True	False		
IN	Bool	false	Non-retain	True	True	True	False		
Q	Bool	false	Non-retain	True	False	True	False		
Pnp Grab Delay5	TON_TIME		Non-retain	True	True	True	False		
PT	Time	T#1s	Non-retain	True	True	True	False		
ET	Time	T#0ms	Non-retain	True	False	True	False		
IN	Bool	false	Non-retain	True	True	True	False		
Q	Bool	false	Non-retain	True	False	True	False		
Temp									
Constant									

Network 1: Fault

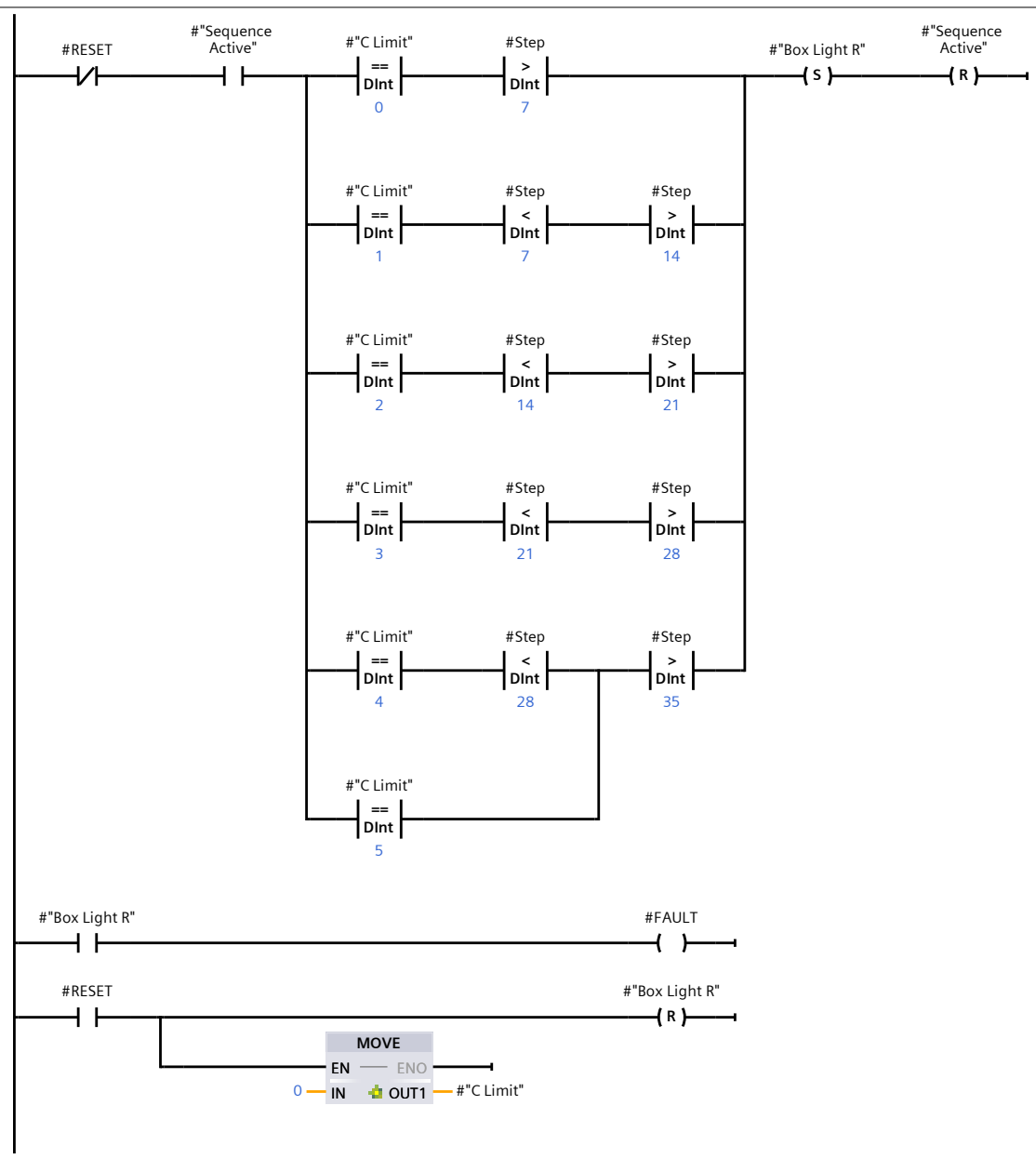

Network 2: Sequence done

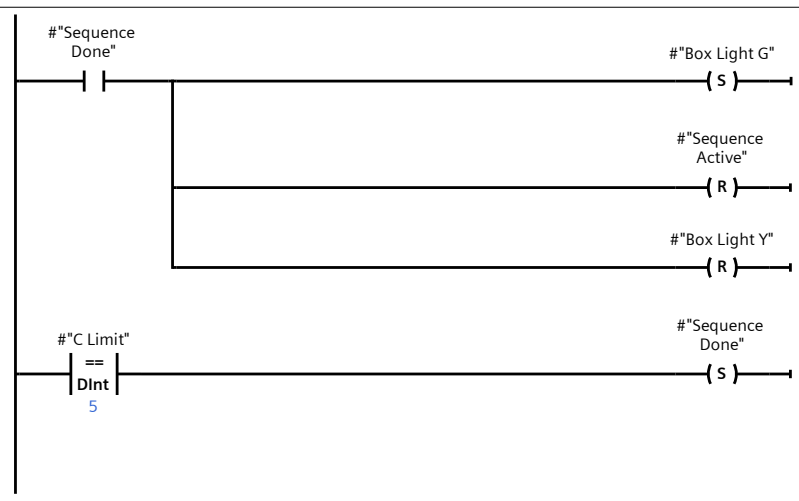

Network 3: Idle(reworked)

Network 4: Step 0 - Sequence Activiation

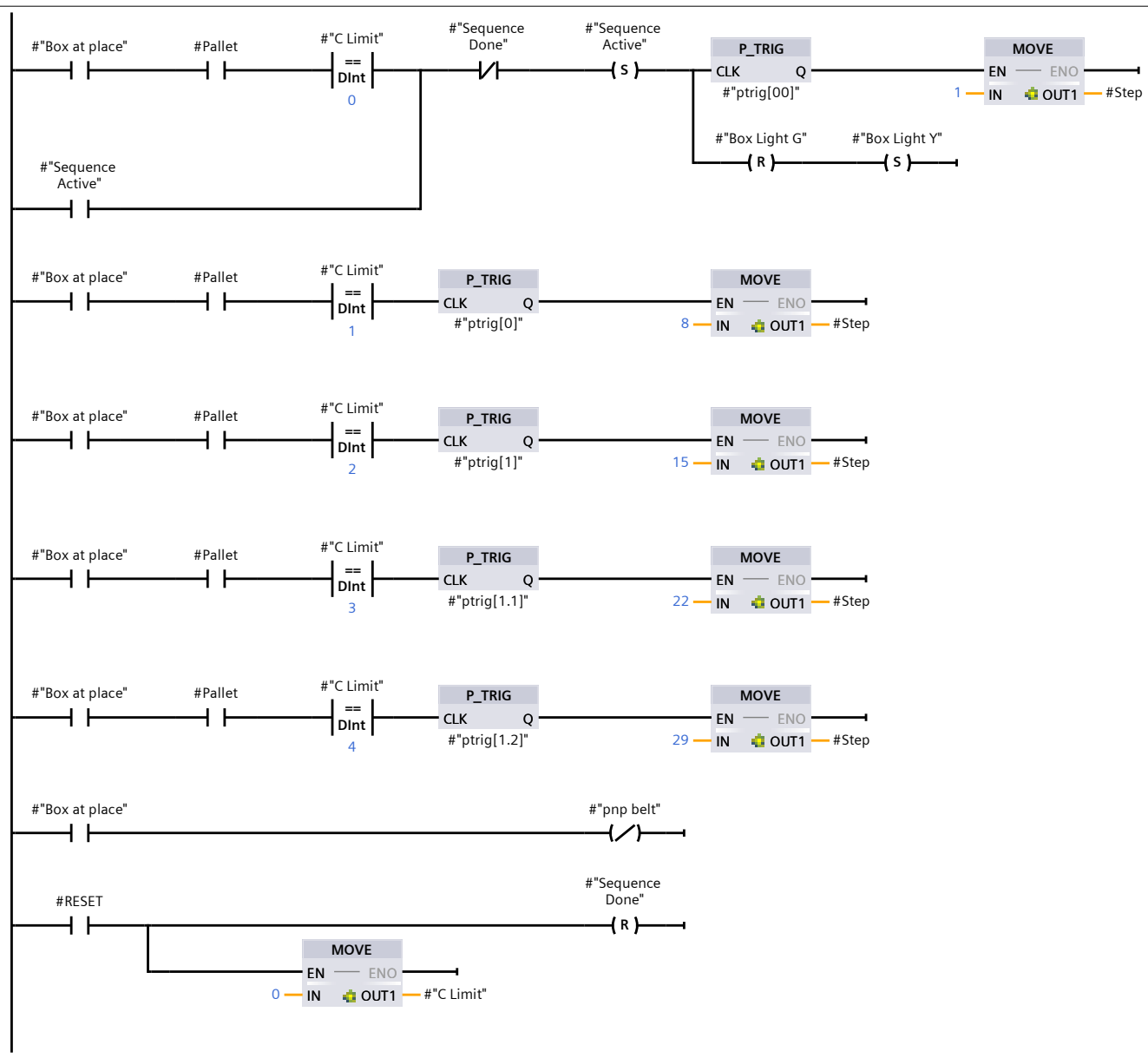

Network 5: Step 1 - Move arm to item position

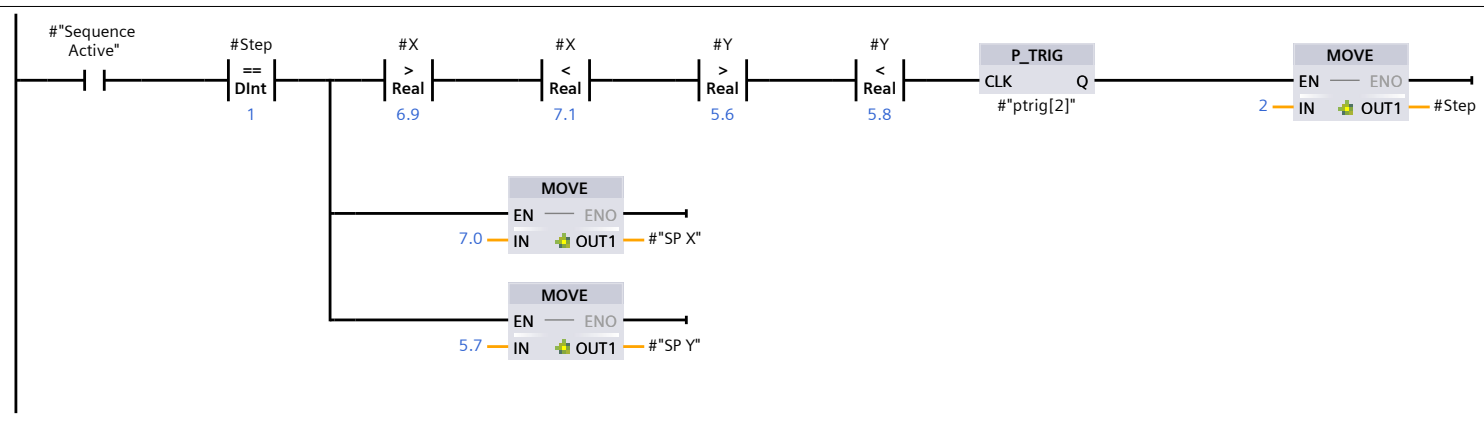

Network 6: Step 2 - Move arm down to item position

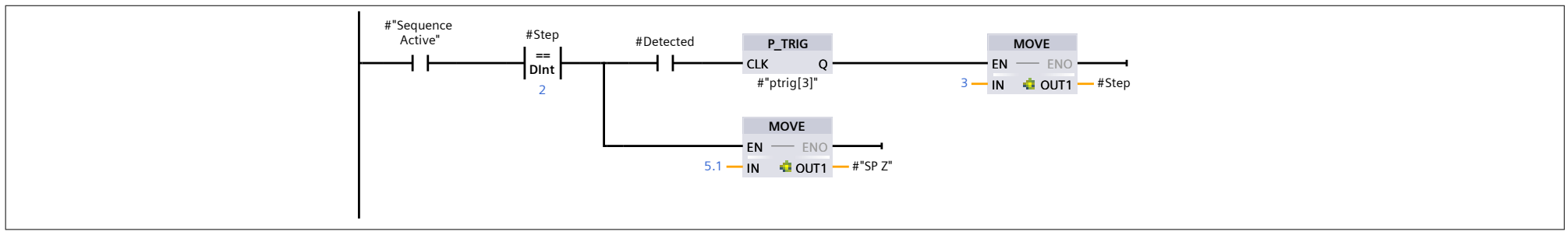

Network 7: Step 3 - Grab item

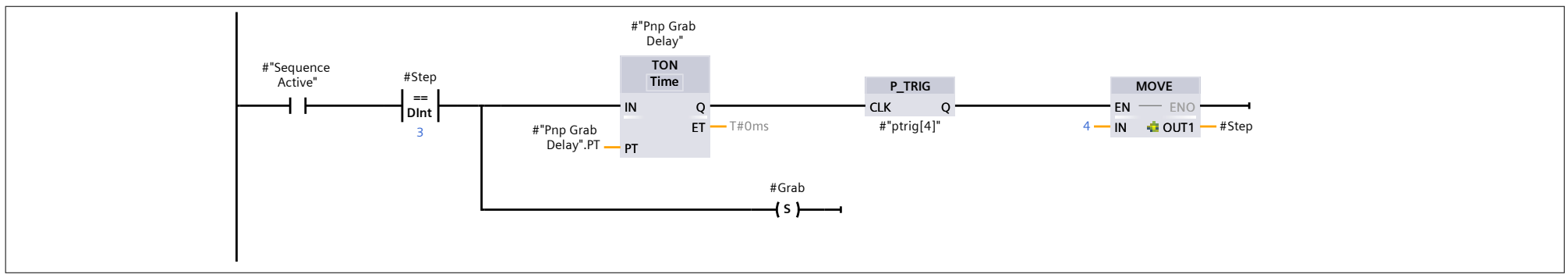

Network 8: Step 4 - Move arm up

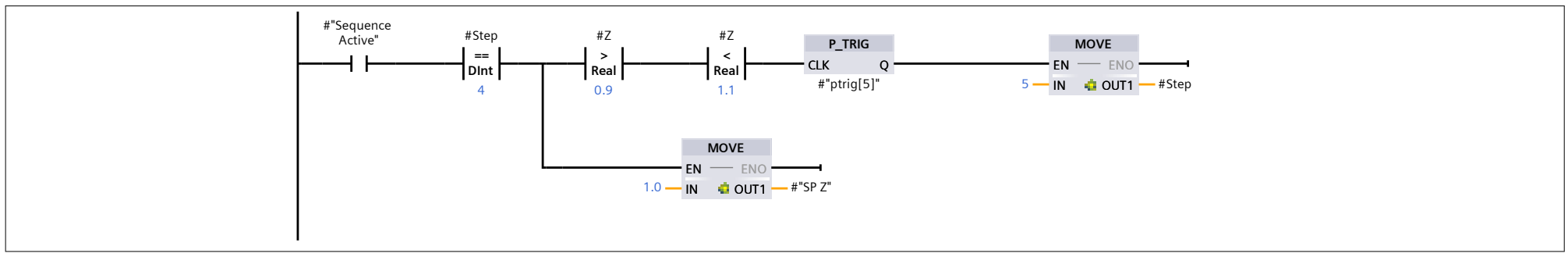

Network 9: Step 5 - Move arm to pallet position 1

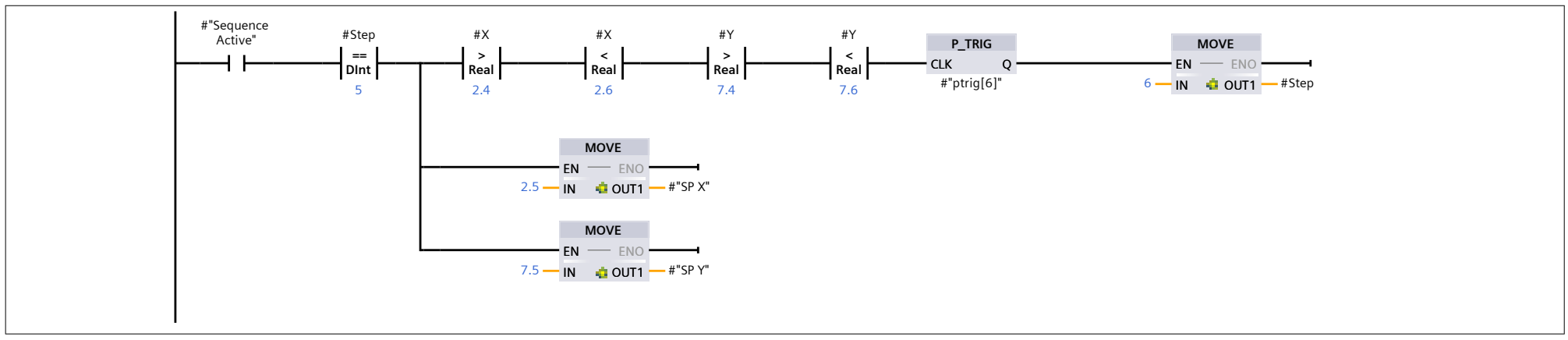

Network 10: Step 6 - Move arm down to pallet position

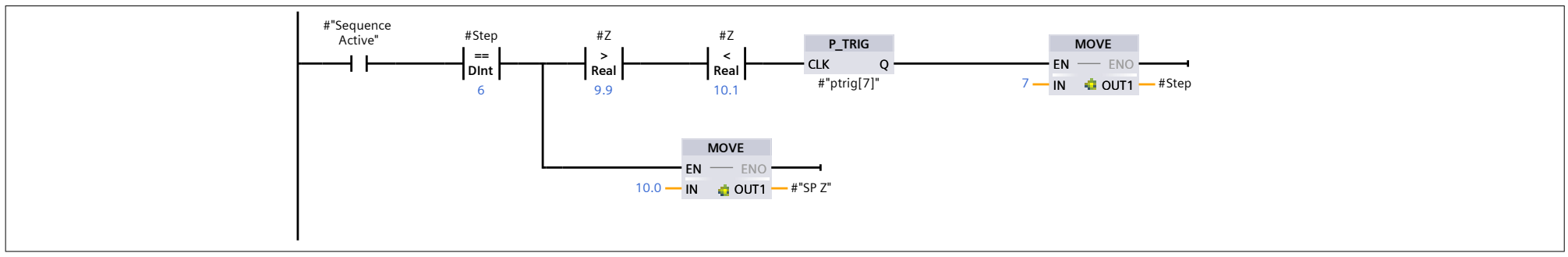

Network 11: Step 7 - Release Grab & Move Arm up

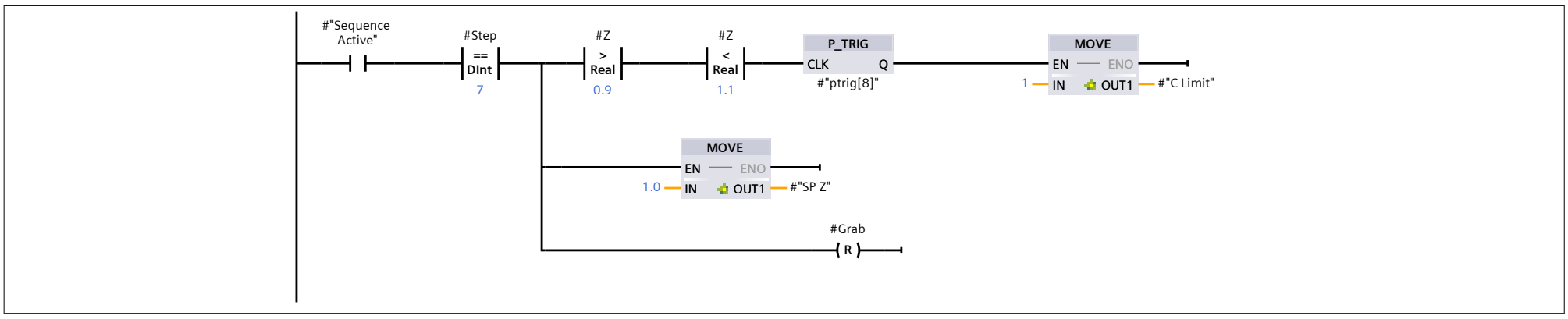

Network 12: Step 8 - Move arm to item position

Repeats step 1-7 (with different XY coordinates)

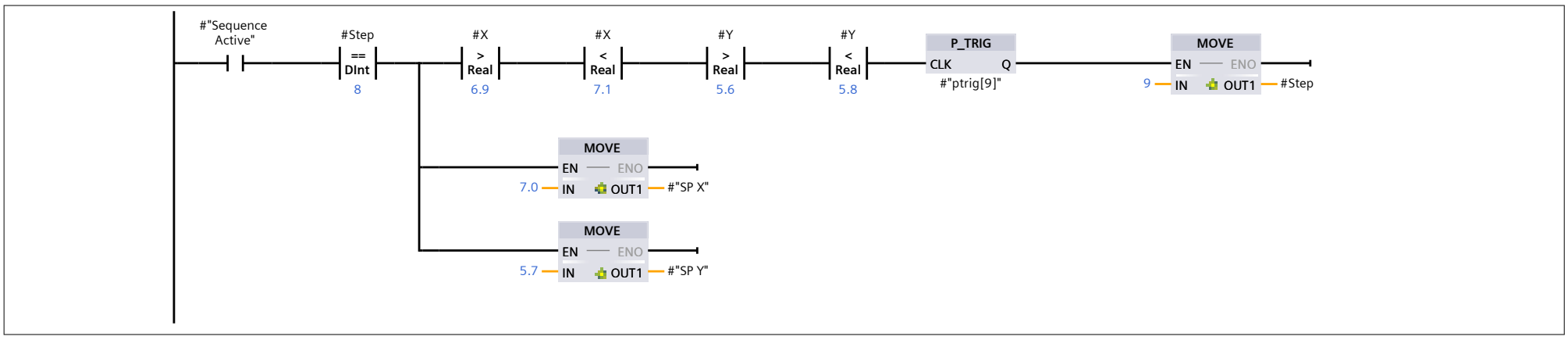

Network 13: Step 9 - Move arm down to item position

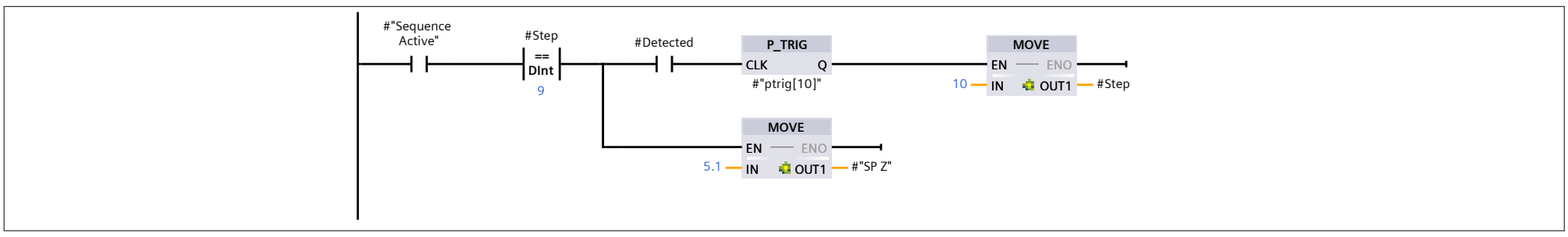

Network 14: Step 10 - Grab item

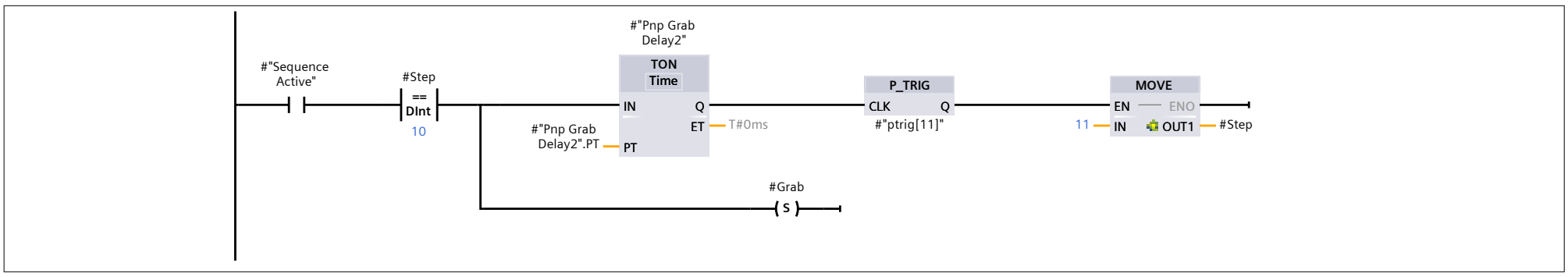

Network 15: Step 11 - Move arm up

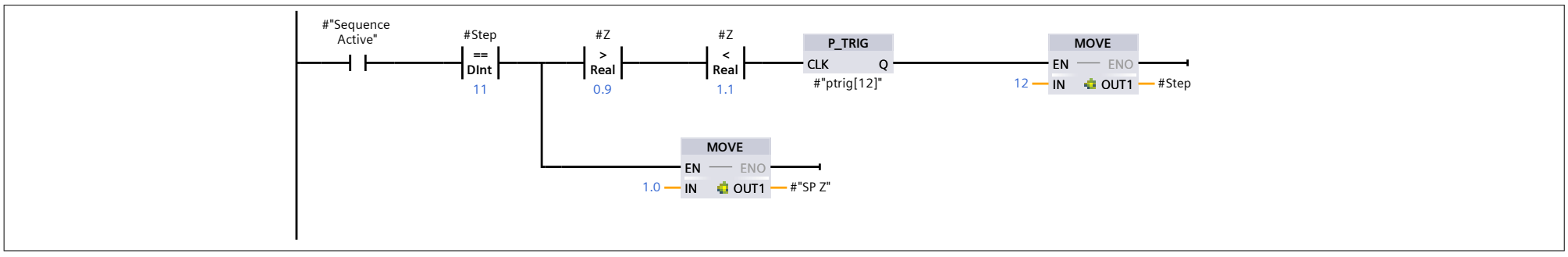

Network 16: Step 12 - Move arm to pallet position 2

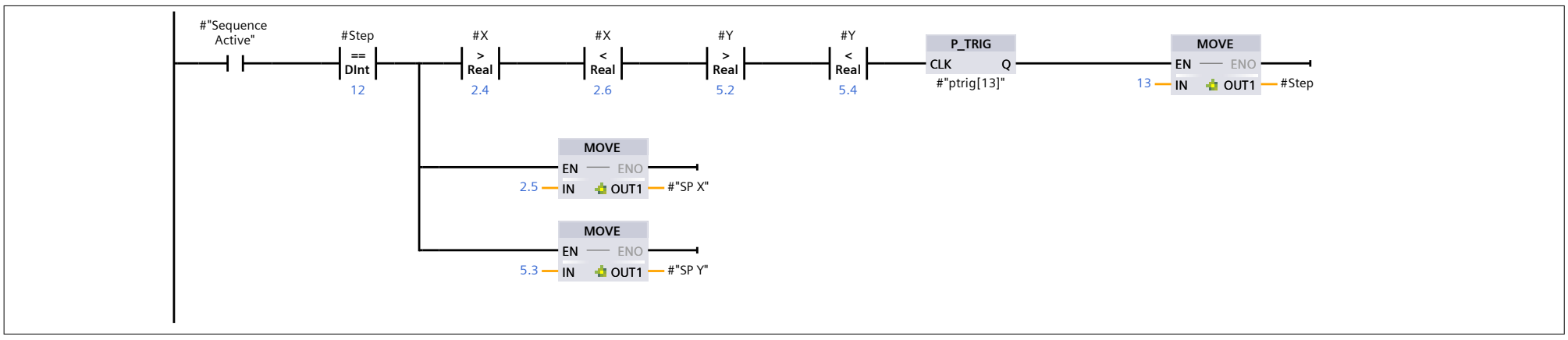

Network 17: Step 13 - Move arm down to pallet position

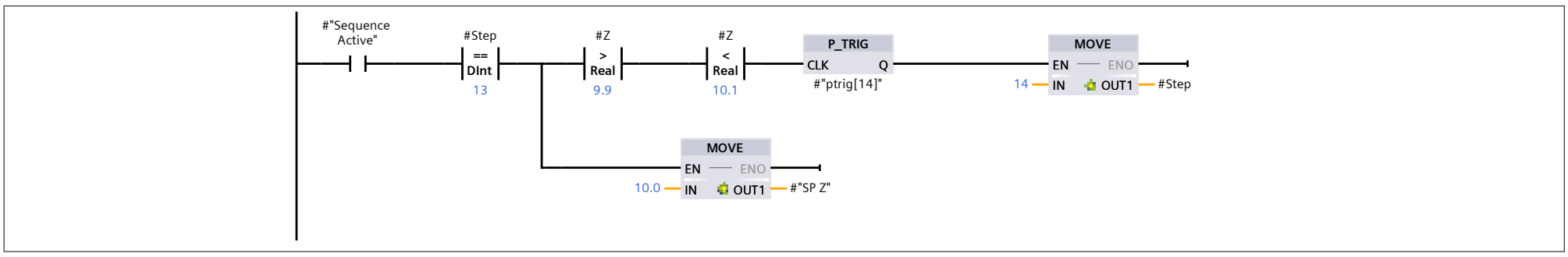

Network 18: Step 14 - Release Grab & Move arm up

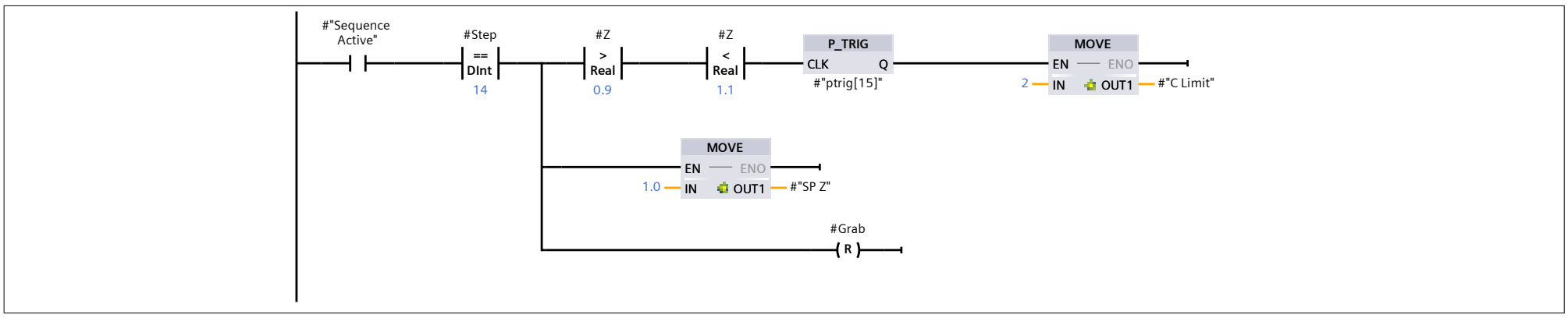

Network 19: Step 15 - Move arm to item position

Repeats step 8-14 (with different XY coordinates)

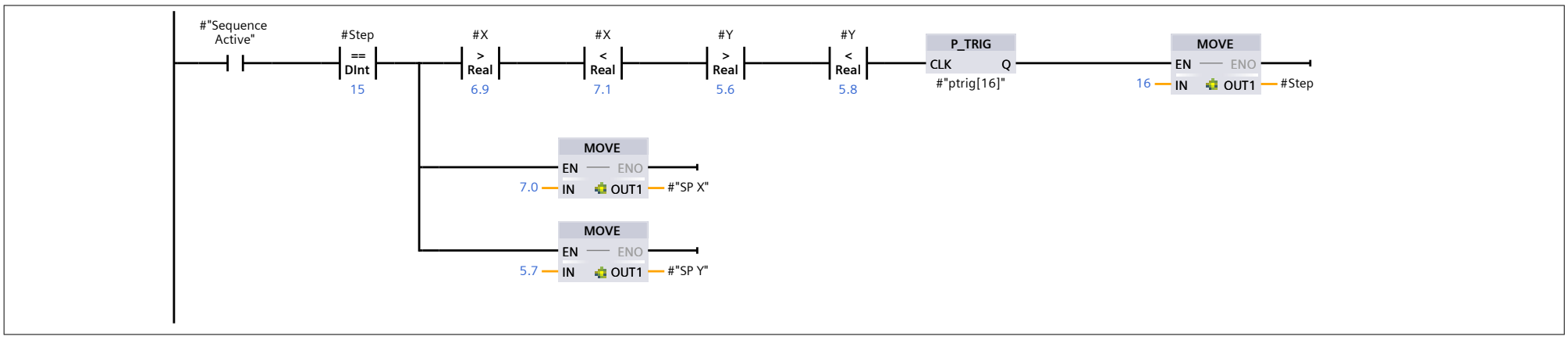

Network 20: Step 16 - Move arm down to item position

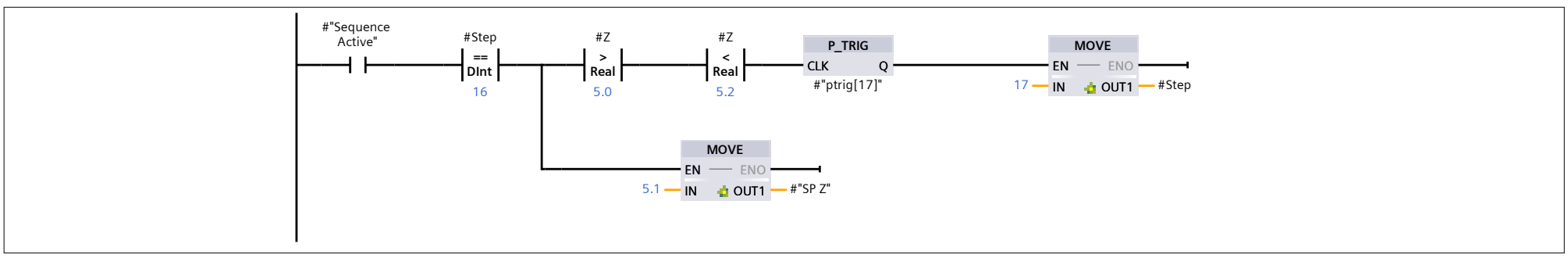

Network 21: Step 17 - Grab item

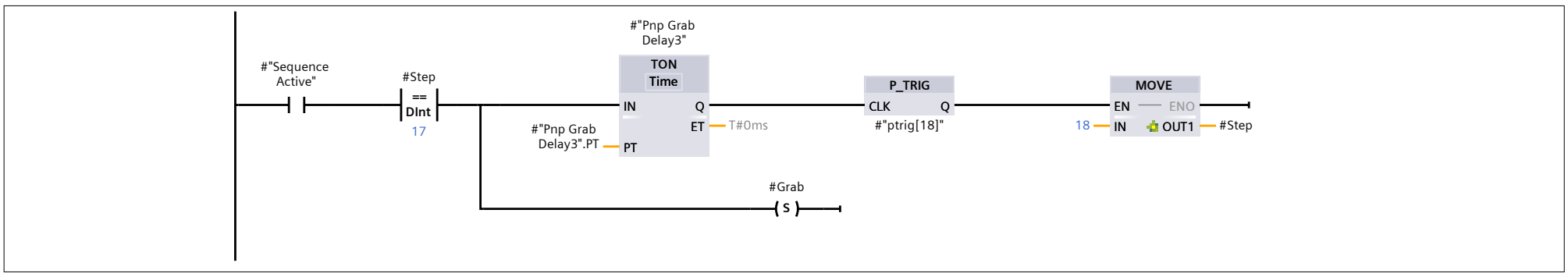

Network 22: Step 18 - Move arm up

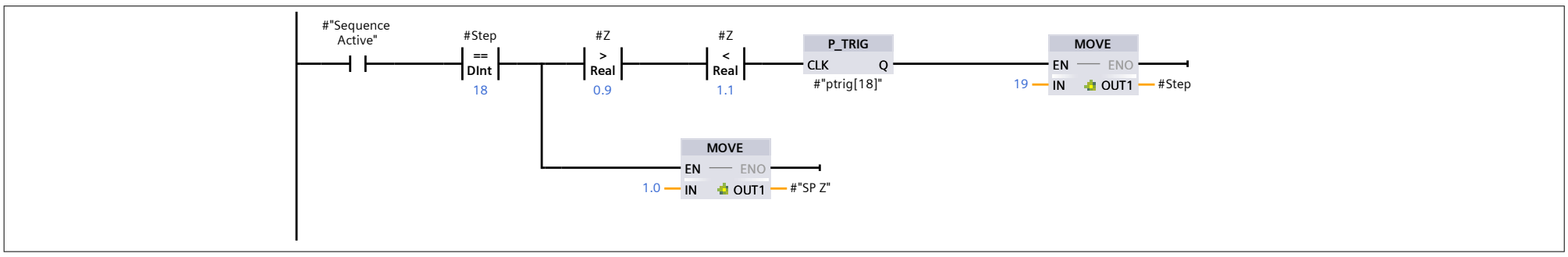

Network 23: Step 19 - Move arm to pallet position 3

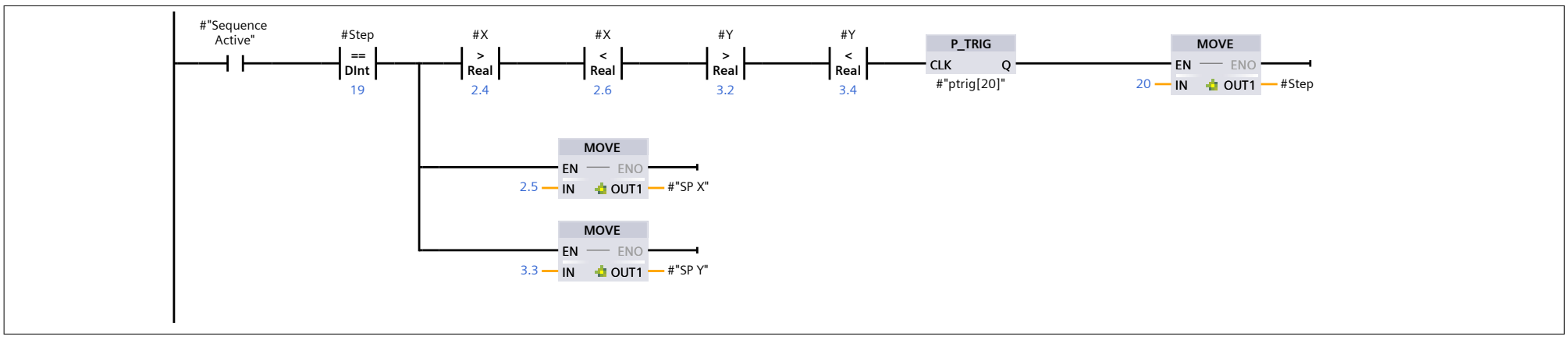

Network 24: Step 20 - Move arm down to pallet position

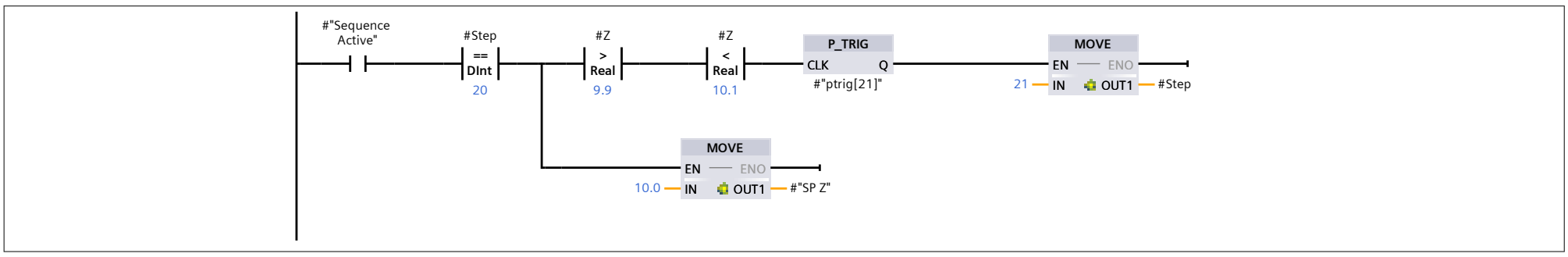

Network 25: Step 21 - Release Grab & Move Arm up

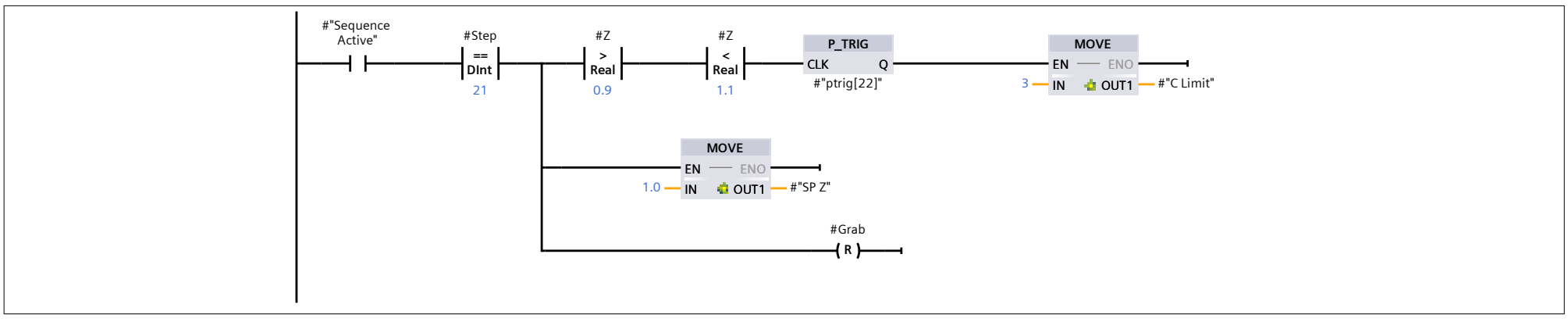

Network 26: Step 22 - Move arm to item position

Repeats step 8-14 (with different XY coordinates)

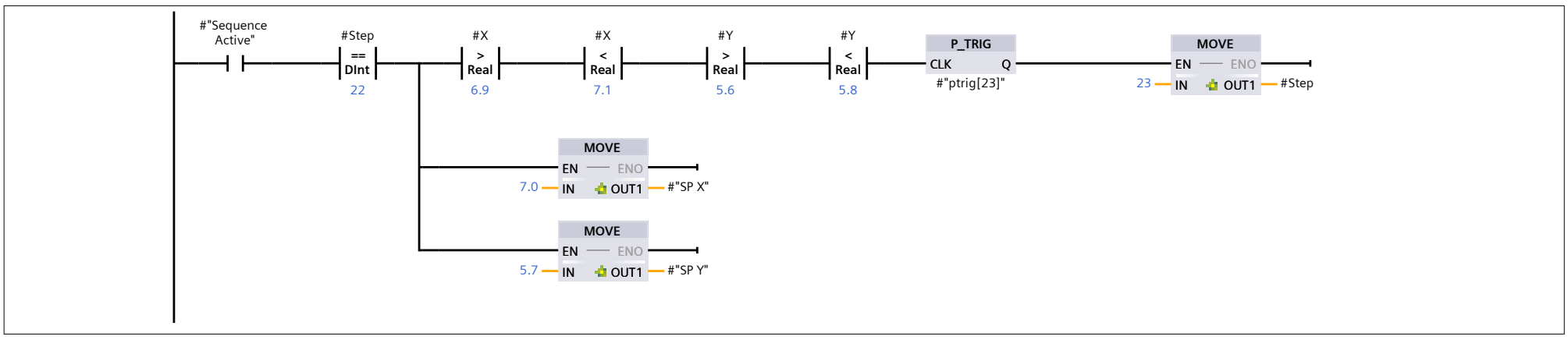

Network 27: Step 23 - Move arm down to item position

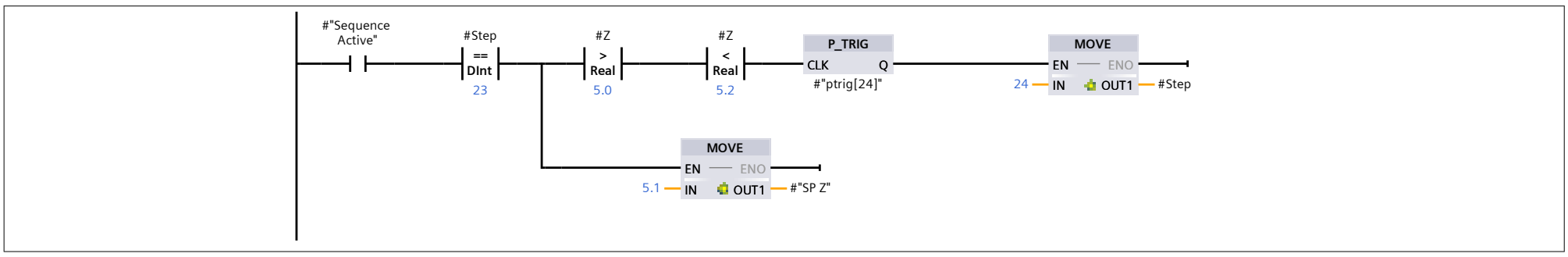

Network 28: Step 24 - Grab item

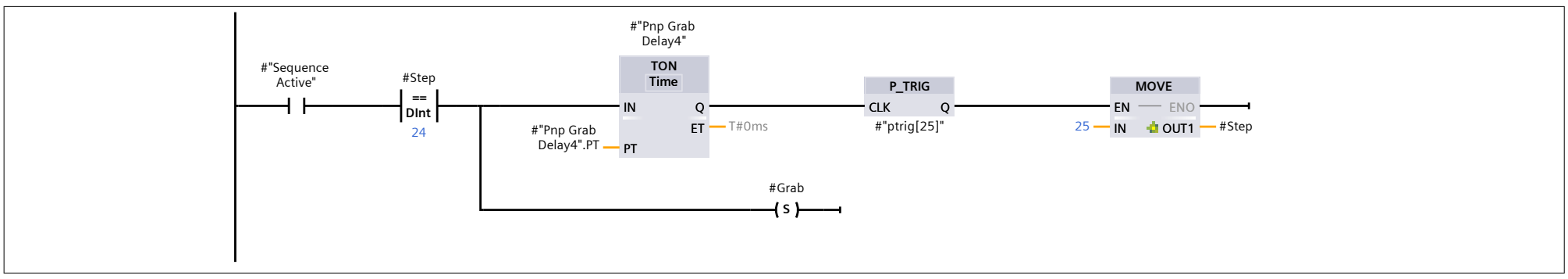

Network 29: Step 25 - Move arm up

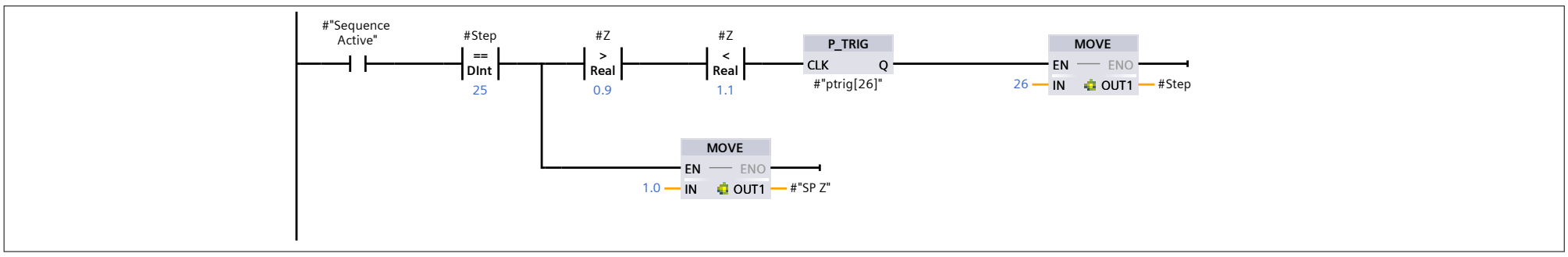

Network 30: Step 26 - Move arm to pallet position 4

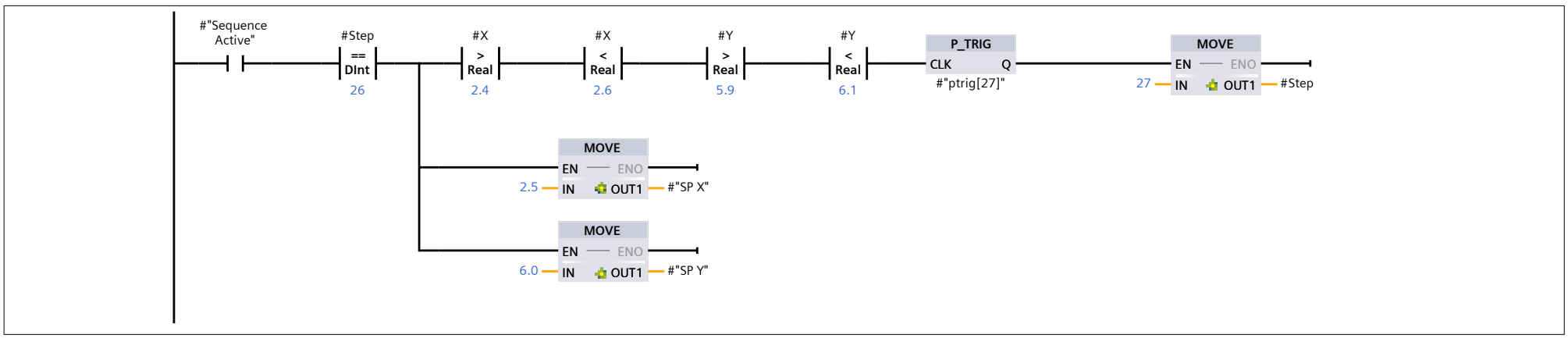

Network 31: Step 27 - Move arm down to pallet position

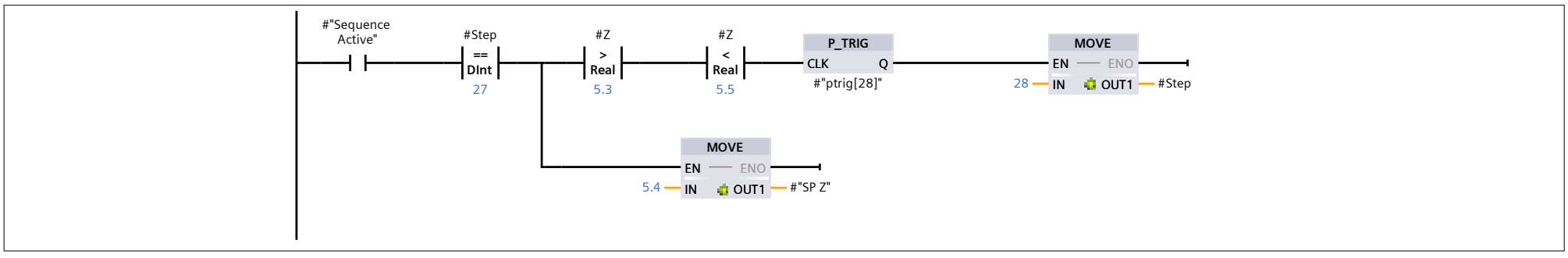

Network 32: Step 28 - Release Grab & Move Arm up

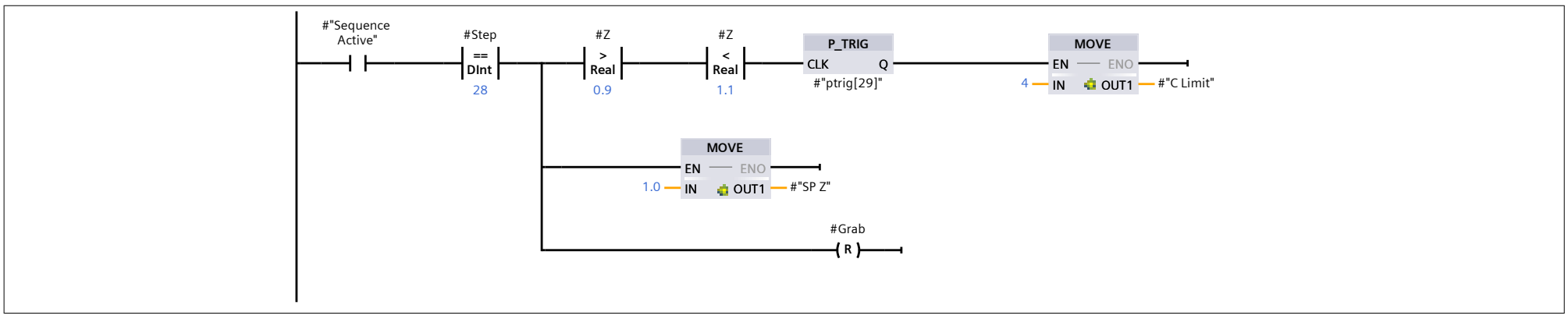

Network 33: Step 29 - Move arm to item position

Repeats step 8-14 (with different XY coordinates)

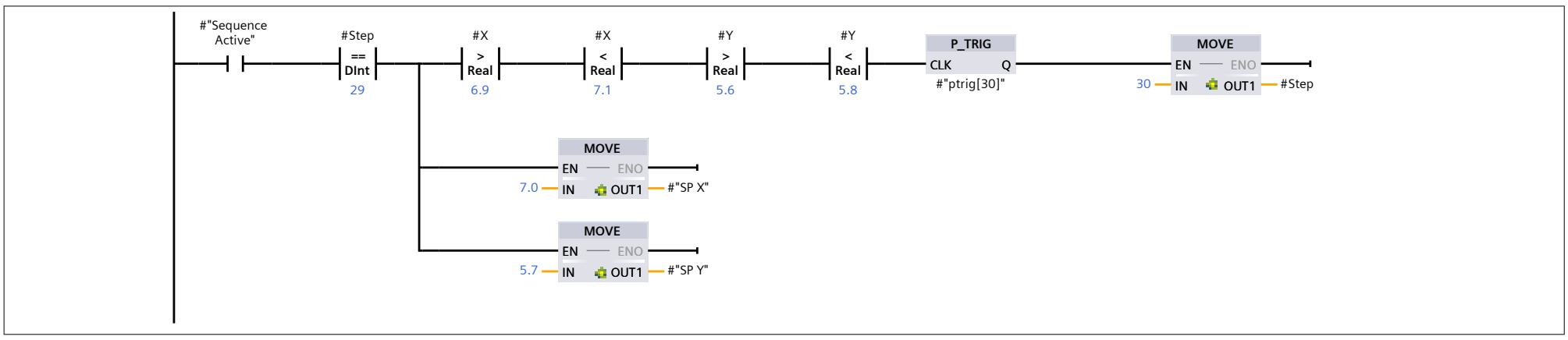

Network 34: Step 30 - Move arm down to item position

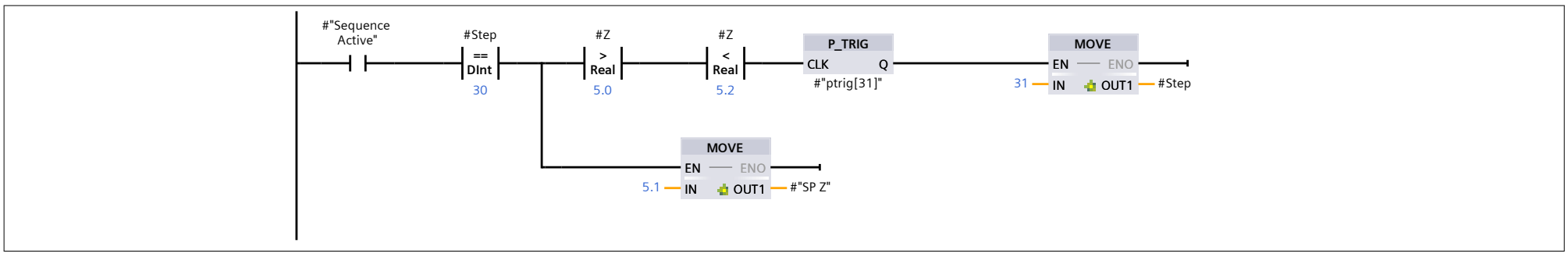

Network 35: Step 31 - Grab item

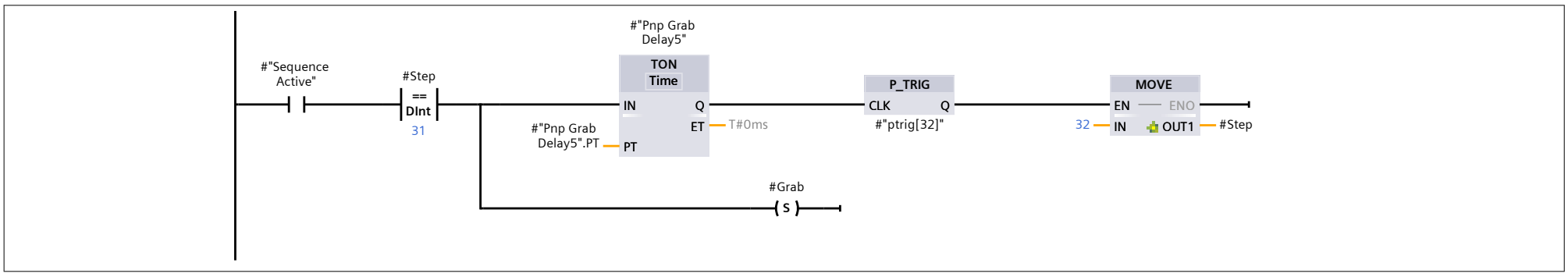

Network 36: Step 32 - Move arm up

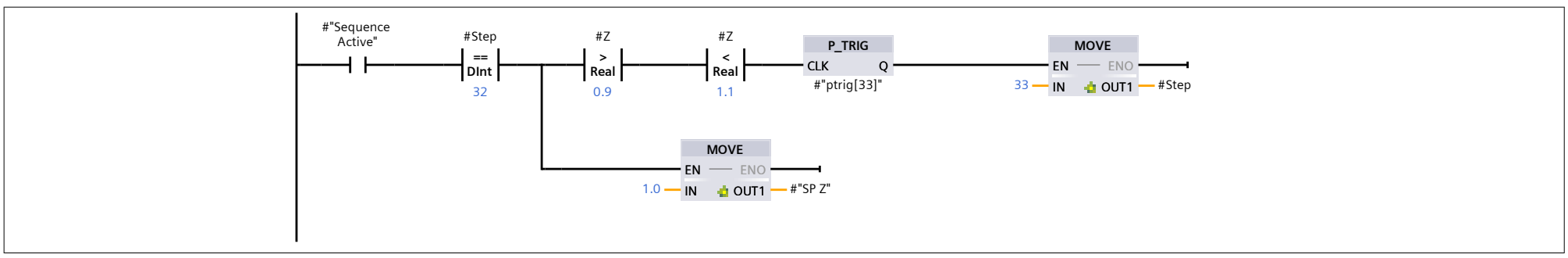

Network 37: Step 33- Move arm to pallet position 5

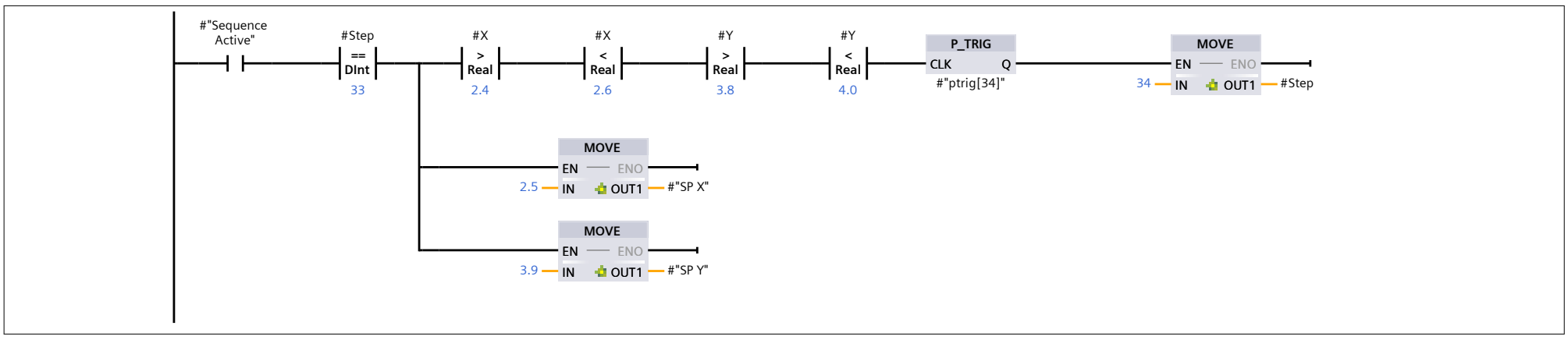

Network 38: Step 34 - Move arm down to pallet position

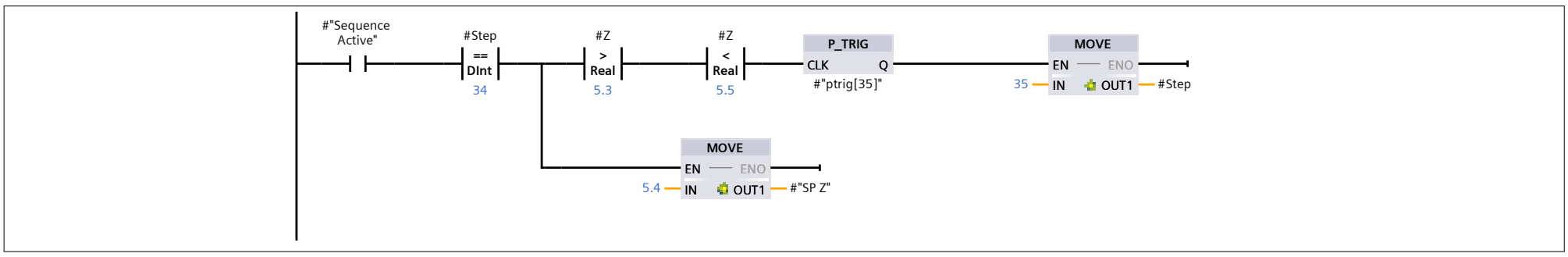
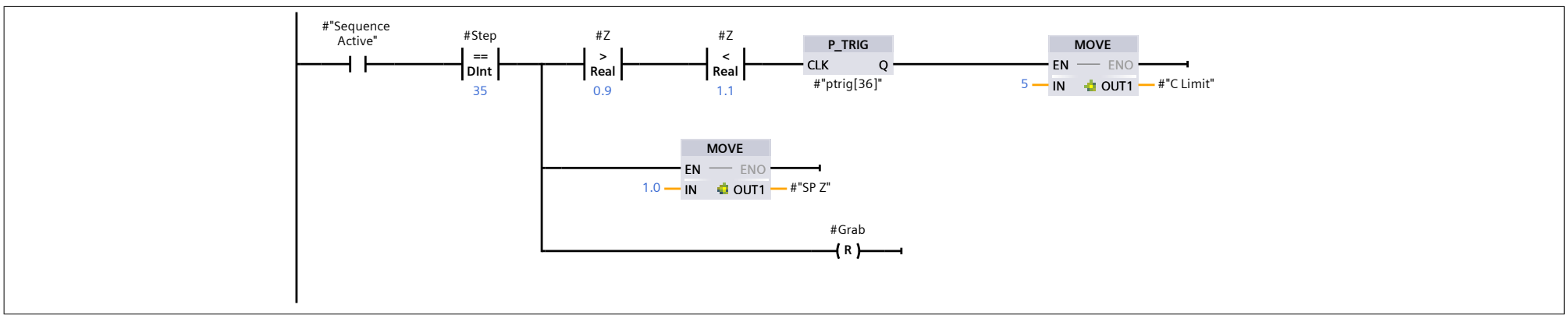
Network 39: Step 35 - Release Grab & Move Arm up